PRODUCT DATASHEET

Panasonic

Product Name :	*Thea Modular 2M USB Socket*
Product Code :	*WVTT22319***
Product Series :	Thea Modular
Technical Specifications:	
Operating Voltage	*230V AC ±%10, 16A*
Outputs	*2xUSB type A*
Output Voltage	*5V DC ± %5, 2.0A*
Operating Temperature	*10°C … +40°C*
Terminal Type :	*Screw Terminal*
Material :	ABS (Acrylonitrile Butadine-Styrene)
Certificates :	CE, WEEE
Colour Options :**	WH: White, BG: Beige, MW: Methalic White, BL: Black, DR: Dark Grey, AN: Anthracite, DR: Dore

Wiring Diagram:

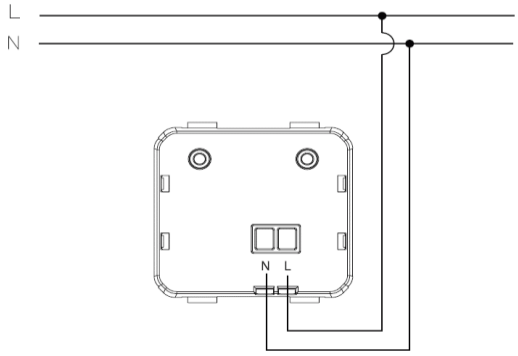

Şekil (1)

Dimensions:

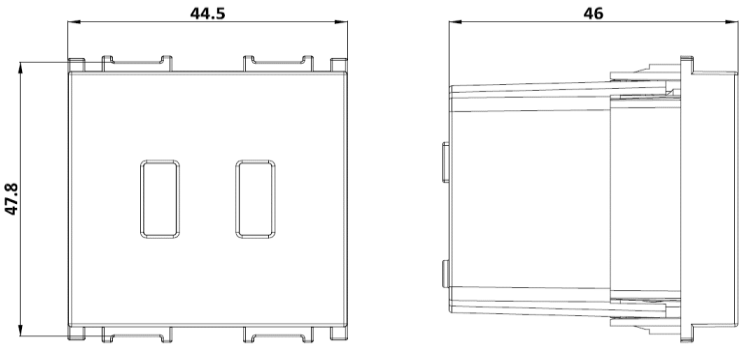

Panasonic Electric Works Elektrik.San. ve Tic. A.Ş.
Abdurrahmangazi Mah. Ebubekir Cad. No: 44 Sancaktepe / İstanbul Tel: 0216 564 55 55 Fax: 0216 564 55 44
ewtr.panasonic.com