PRODUCT DATASHEET

Panasonic

Product Name :	*18 Gang Surface Mounted Distribution Box*
Product Code :	*BQDT2181*

Technical Specifications:	
Material :	ABS (Acrylonitrile Butadine-Styrene)
Certifications	CE, TSE, WEEE

Dimensions:

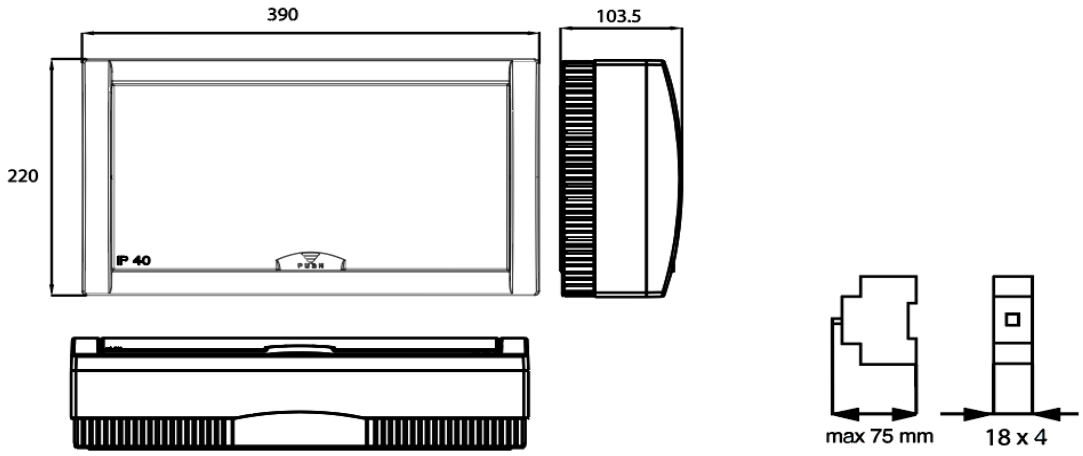

Panasonic Electric Works Elektrik.San. ve Tic. A.Ş.
Abdurrahmangazi Mah. Ebubekir Cad. No: 44 Sancaktepe / İstanbul Tel: 0216 564 55 55 Fax: 0216 564 55 44
ewtr.panasonic.com